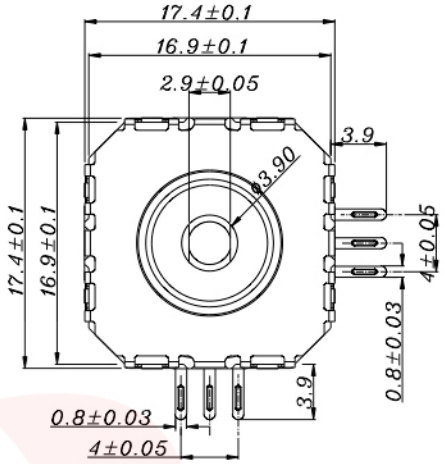

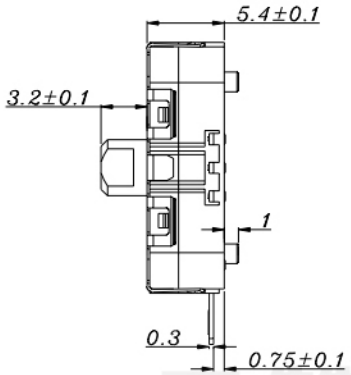

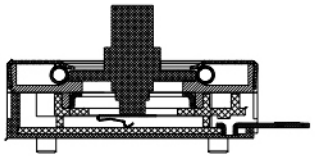

GT-TC011X-HXXX-LX

G-SWITCH

Operating Force
A=4-direction 120±30gf
Center push 205±50gf

Switch Height(mm)
H032=3.2mm

Switch lifetime (Force)
L05=50,000 Cycles

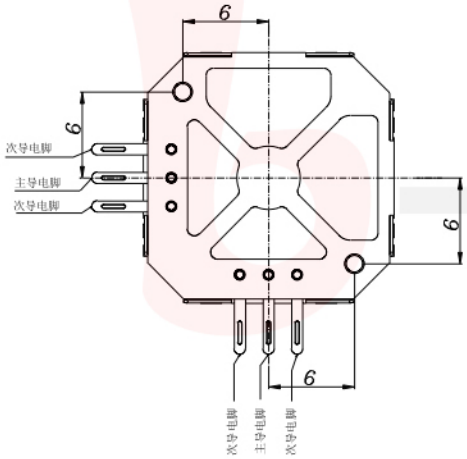

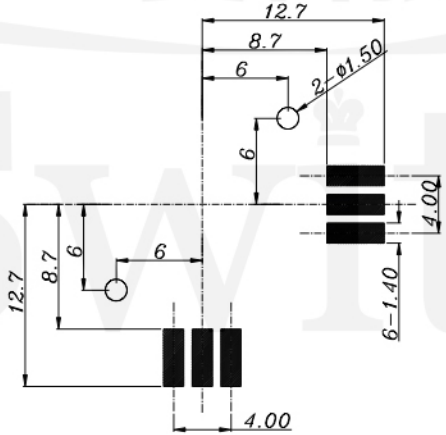

P.C.B LAND DIMENSION

G-Switch Specification:
Operating temperature range：-30℃to+85℃
Rating：50mA.12V DC
Insulation resistance:：100MΩ min.100V DC
Dielectric strength： 250V AC for 1 min
Contact resistance:：100m Ω max.
Travel:4-direction-25° -0o +25° Push portion 0.90±0.1mm

原理图

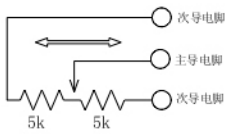

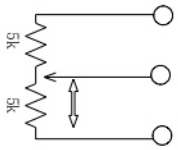

Pb Process Capable | RoHS Compliant 2002/95/EC | HALOGEN FREE Compliant Halogen Free

品赞科技 b-Switch®

G-Switch Electronic (HongKong) CO.,Ltd.

Unless otherwise specified, Tolerance:	DESIGN FengFengChen	DATE 2019.05.29	Molde code:
X. ±0.30	CHECKED	DATE	GT-TC011X-HXXX-LX
X.x ±0.20	APPROVED	DATE	
X.xx ±0.15	http://www.dg-switch.com	REV.: X1	SCALE: 4:1 / UNIT: mm
X.xxx ±0.10	TEL:0769-82388879	SIZE: A4	SHEET: 1/1
Angles ±3°			