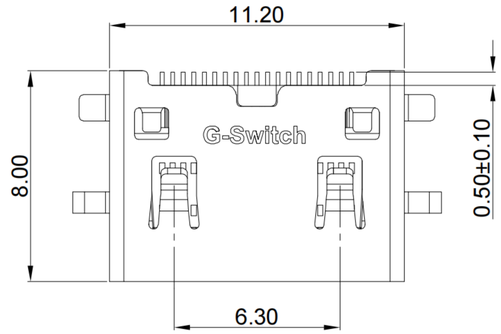

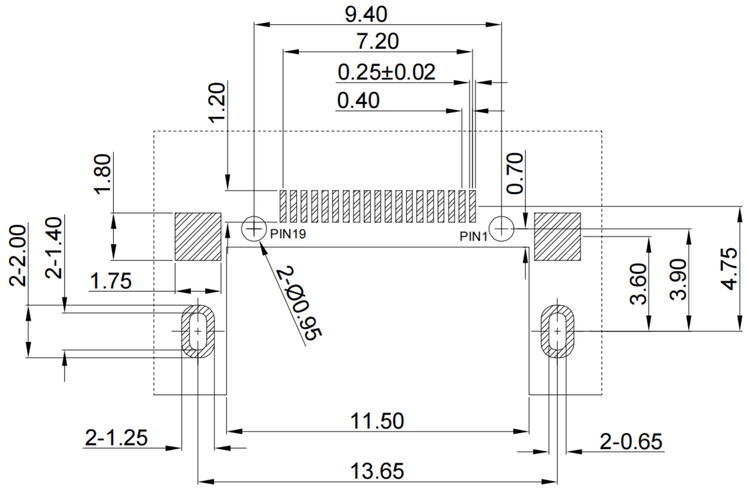

RECOMMENDED PCB LAYOUT
TOLERANCE:±0.05

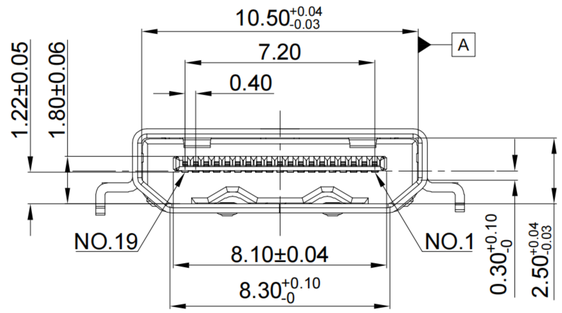

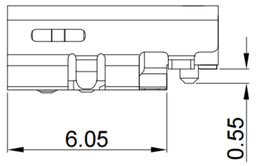

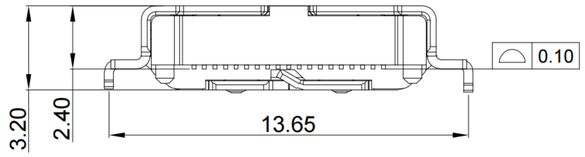

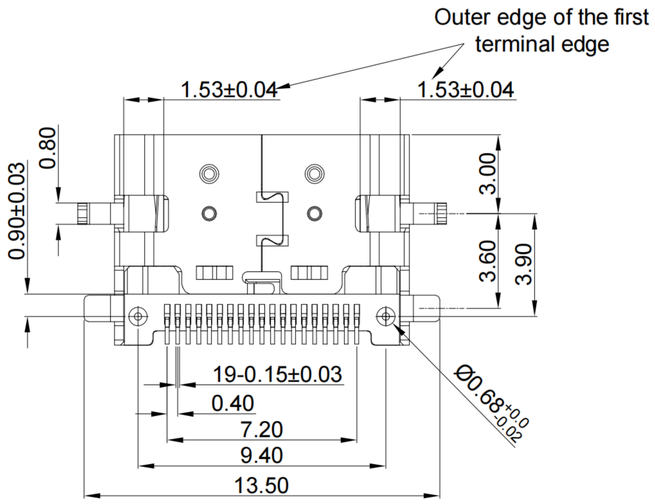

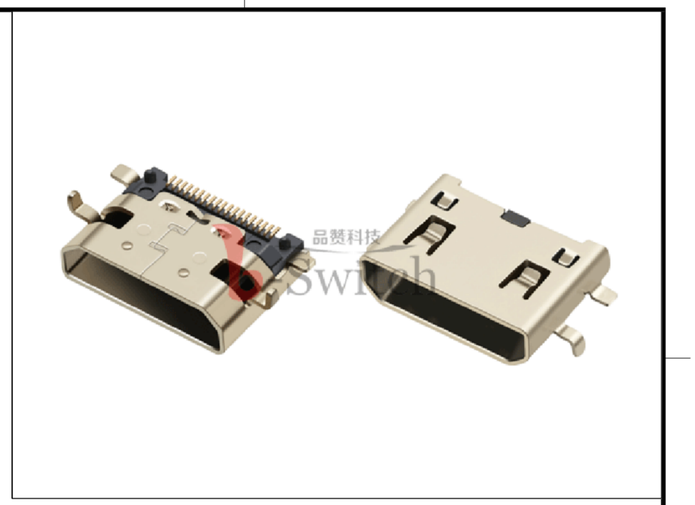

GT-HD006A-X X X GX

DETAIL
A=19pin CF Sink0.8 SMT
B=19pin CF Sink1.5 SMT

Shell Material
C=Copper alloy
F=Ferroalloy
S=Stainless

Shell Plating
N=Ni
G=Gold

Housing Colour
N=Black

Terminal Plating
G0=G/F
G1=1u
G3=3u
G5=5u
G15=15u
G30=30u

G-Switch HDMI Specification:

1.Current rated: 1.0A Voltage rating: 24V AC
2.Withstanding voltage: 500V AC/minute
3.Contact resistance: 30mΩ Max
4.Insulation resistance: 100MΩ Min
5.Operating temperature: -55°C ~ +105°C
6.Mating force: 44.1N
7.Unmating force: 9.8N~39.2N,After durability: 3N~25N
8.Durability cycle:10, 000 cycles

NO.	PARTS	MATERIAL	REMARKS
1	SHELL	COPPER ALLOY(C2680)	Au PLATING ON CONTACT AREA
2	HOUSING	HIGH TEMPERATURE PLASTIC	LCP BLACK UL 94 V-0
3	TERMINALS	COPPER ALLOY(C2680)	Au PLATING ON CONTACT AREA

Pb Process Capable

RoHS Compliant EU RoHS Standards

HALOGEN Compliant Halogen Free

SCALE: 1:1	UNIT: mm	Title:	Horizontal HDMI 19P Female Mid-Mout 0.80 SMT CH=1.08 L=8.00mm
SIZE: A4			
Unless otherwise General Tolerance:		Molde Code:	GT-HD0006A-XXXGX

X.	±0.35
X.x	±0.25
X.xx	±0.15
X°	±5°

DRAWN	CHECKED	APPROVED	DATE
Jiang	Xia	Chen	2023.02.01

品赞科技 b-Switch ®
www.dg-switch.com

REV: A0 SHEET: 1/1