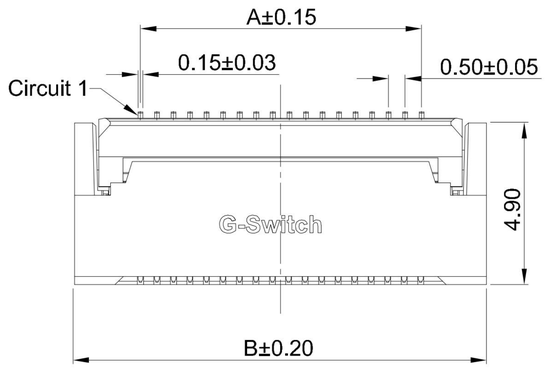

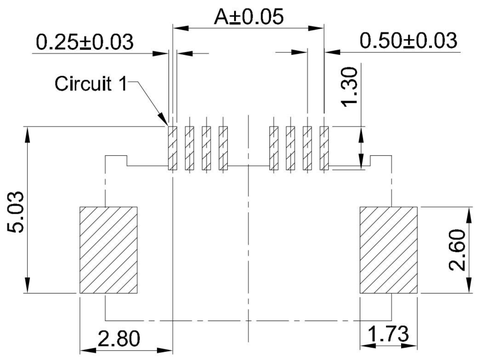

RECOMMENDED PCB LAYOUT
TOLERANCE:±0.05

G-Switch Specification:

1.Current rated: 0.5A AC/DC
2.Voltage rating: 50V AC/DC
3.Withstanding voltage: 250V AC
4.Contact resistance: 40mΩ max.
5.Insulation resistance: 500MΩ min
6.Durability cycle: 20Cycles
7.Removal force: 0.03kgf/Pin min
8.Operating temperature range: -25°C ~ +85°C

GT-F0503 S R 20 -XX X XX 01

G-Switch

Series No

Termipoint
S-SMT

Angle
R-90°

Terminal Plating
11-All G/F

Housing Colour
S-Nature

Pin Q' PY
04~60

Height
20-2.0mm

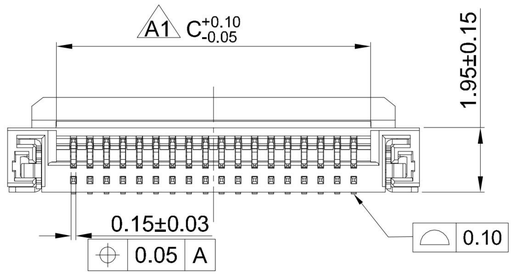

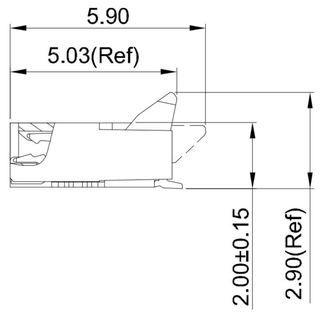

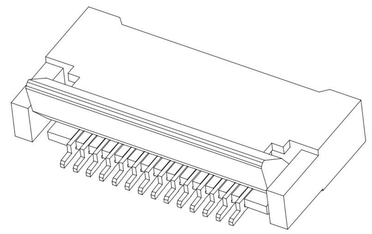

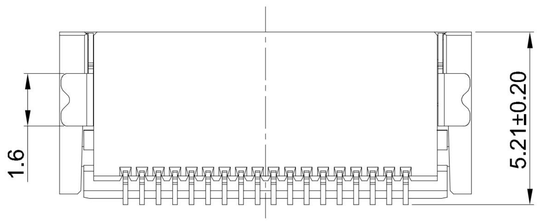

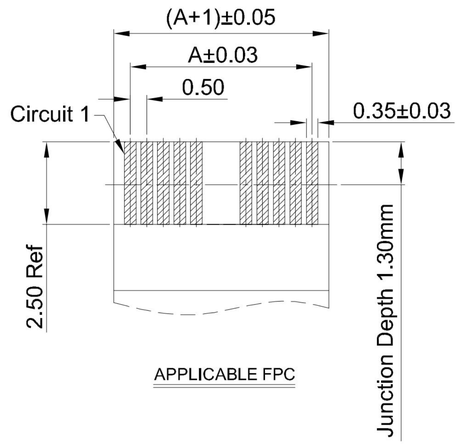

APPLICABLE FPC

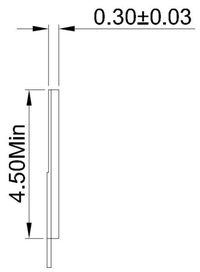

Ordering Information:

Circuit	Dimensions(mm)			Circuit	Dimensions(mm)		
	A	B	C		A	B	C
4	1.50	5.50	2.60	25	12.00	16.00	13.10
5	2.00	6.00	3.10	26	12.50	16.50	13.60
6	2.50	6.50	3.60	27	13.00	17.00	14.10
7	3.00	7.00	4.10	28	13.50	17.50	14.60
8	3.50	7.50	4.60	29	14.00	18.00	15.10
9	4.00	8.00	5.10	30	14.50	18.50	15.60
10	4.50	8.50	5.60	31	15.00	19.00	16.10
12	5.50	9.50	6.60	32	15.50	19.50	16.60
13	6.00	10.00	7.10	33	16.00	20.00	17.10
14	6.50	10.50	7.60	34	16.50	20.50	17.60
15	7.00	11.00	8.10	35	17.00	21.00	18.10
16	7.50	11.50	8.60	36	17.50	21.50	18.60
17	8.00	12.00	9.10	37	18.00	22.00	19.10
18	8.50	12.50	9.60	40	19.50	23.50	20.60
19	9.00	13.00	10.05	45	22.00	26.00	23.10
20	9.50	13.50	10.60	50	24.50	28.50	25.60
21	10.00	14.00	11.10	54	26.50	30.50	27.60
22	10.50	14.50	11.60	55	27.00	31.00	28.10
23	11.00	15.00	12.10	60	29.50	33.50	30.60
24	11.50	15.50	12.60	---	---	---	---

NO.	PART NAME	MATERIAL	REMARK
4	SOLDER TABS	BRASS	MATTE Tin
3	CONTACT	PHOSPHOR BRONZE	ALL G/F
2	COVER	PA9T,94V-0	BLACK
1	HOUSING	LCP,94V-0	NATURE

Pb Process Capable | RoHS Compliant EU RoHS Standards | HALOGEN Compliant Halogen Free

SCALE: 1:1 | UNIT: mm
SIZE: A4

Unless otherwise General Tolerance:

X	±0.40
X.x	±0.30
X.xx	±0.20
X°	±5°
X.x°	±3°

Title: FPC 0.50mm Pitch 90° SMT Type H2.0mm Back Flip Connector

Molde Code: GT-F0503SR20-XXXXX01

DRAWN	CHECKED	APPROVED	DATE
Hu	Chen	Chen	2024.10.15

REV: A1 | SHEET: 1/1

品赞科技 b-Switch ®
www.dg-switch.com