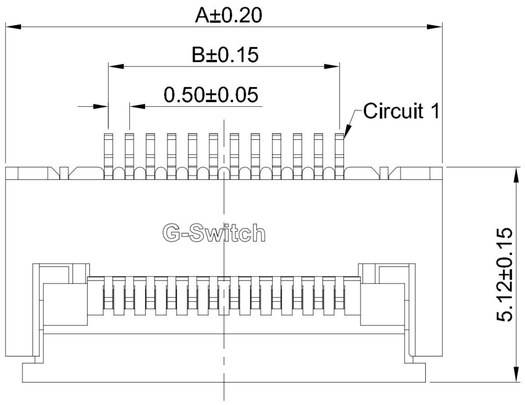

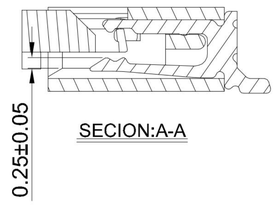

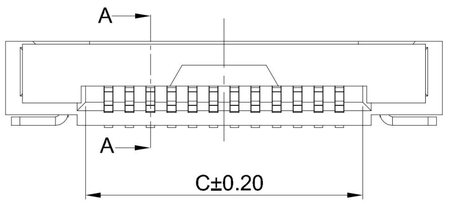

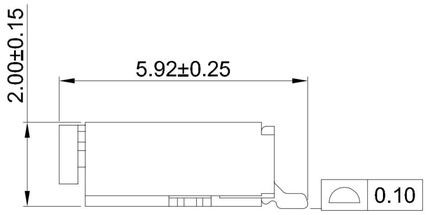

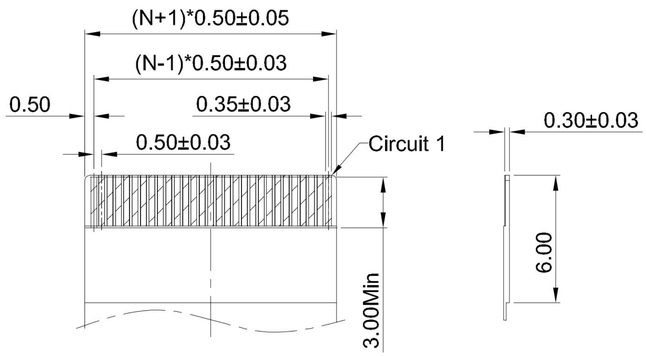

APPLICABLE FPC

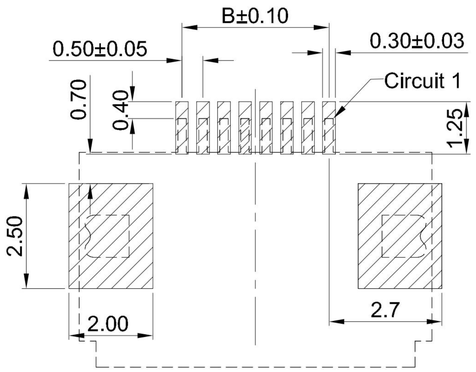

RECOMMENDED PCB LAYOUT
TOLERANCE:±0.05

NO.	PART NAME	MATERIAL	REMARK
4	SOLDER TABS	PHOSPHOR BRONZE	MATTE Tin
3	CONTACT	PHOSPHOR BRONZE	MATTE Tin
2	COVER	LCP,94V-0	BLACK
1	HOUSING	LCP,94V-0	NATURE

G-Switch Specification:

1.Current rated: 0.4A AC/DC
2.Voltage rating: 50V AC/DC
3.Withstanding voltage: 200V AC
4.Contact resistance: 20mΩ max.
5.Insulation resistance: 500MΩ min
6.Durability cycle: 30Cycles
7.Removal force: 0.21kgf/Pin min
8.Operating temperature range: -25°C ~ +85°C

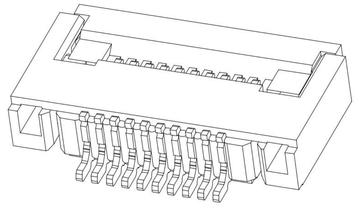

GT-F0506 S R 20 -XX X XX 01

- **G-Switch**
- **Series No**
- **Termipoint** S-SMT
- **Angle** R-90°
- **Height** 20-2.0mm
- **Pin Q' PY** 04~60
- **Housing Colour** S-Nature
- **Terminal Plating** MT-Matte Tin

Ordering Information:

Circuit	Dimensions(mm) A	B	C	Circuit	Dimensions(mm) A	B	C	Circuit	Dimensions(mm) A	B	C
04	6.40	1.50	2.57	23	15.90	11.00	12.07	42	25.40	20.50	21.57
05	6.90	2.00	3.07	24	16.40	11.50	12.57	43	25.90	21.00	22.07
06	7.40	2.50	3.57	25	16.90	12.00	13.07	44	26.40	21.50	22.57
07	7.90	3.00	4.07	26	17.40	12.50	13.57	45	26.90	22.00	23.07
08	8.40	3.50	4.57	27	17.90	13.00	14.07	46	27.40	22.50	23.57
09	8.90	4.00	5.07	28	18.40	13.50	14.57	47	27.90	23.00	24.07
10	9.40	4.50	5.57	29	18.90	14.00	15.07	48	28.40	23.50	24.57
11	9.90	5.00	6.07	30	19.40	14.50	15.57	49	28.90	24.00	25.07
12	10.40	5.50	6.57	31	19.90	15.00	16.07	50	29.40	24.50	25.57
13	10.90	6.00	7.07	32	20.40	15.50	16.57	51	29.90	25.00	26.07
14	11.40	6.50	7.57	33	20.90	16.00	17.07	52	30.40	25.50	26.57
15	11.90	7.00	8.07	34	21.40	16.50	17.57	53	30.90	26.00	27.07
16	12.40	7.50	8.57	35	21.90	17.00	18.07	54	31.40	26.50	27.57
17	12.90	8.00	9.07	36	22.40	17.50	18.57	55	31.90	27.00	28.07
18	13.40	8.50	9.57	37	22.90	18.00	19.07	56	32.40	27.50	28.57
19	13.90	9.00	10.07	38	23.40	18.50	19.57	57	32.90	28.00	29.07
20	14.40	9.50	10.57	39	23.90	19.00	20.07	58	33.40	28.50	29.57
21	14.90	10.00	11.07	40	24.40	19.50	20.57	59	33.90	29.00	30.07
22	15.40	10.50	11.57	41	24.90	20.00	21.07	60	34.40	29.50	30.57

Process Capable Pb | RoHS Compliant EU RoHS Standards | Halogen Free Compliant

SCALE: 1:1 | UNIT: mm
SIZE: A4

Unless otherwise General Tolerance:

X	±0.40
X.x	±0.30
X.xx	±0.20
X°	±5°
X.x°	±3°

Title: FPC 0.50mm Pitch 90° SMT Type H2.0mm Connector

Molde Code: GT-F0506SR20-XXXXX01

DRAWN	CHECKED	APPROVED	DATE
Hu	Chen	Chen	2022.12.28

品赞科技 b-Switch ®
www.dg-switch.com

REV: A0 | SHEET: 1/1