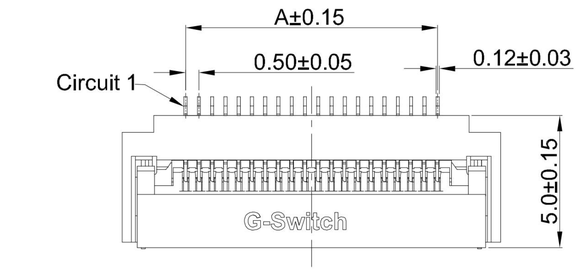

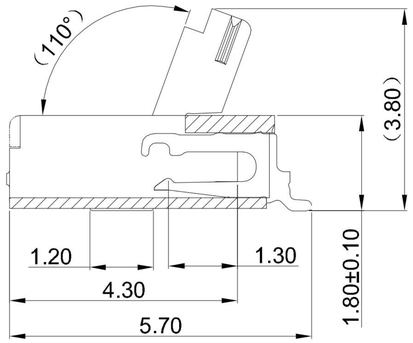

SECTION A-A(2:1)

G-Switch Specification:

1.Current rated: 0.5A AC/DC
2. Voltage rating: 50V AC/DC
3.Withstanding voltage: 250V AC
4.Contact resistance: 40mΩ max.
5.Insulation resistance: 500MΩ min
6.Durability cycle: 20Cycles
7.Removal force: 0.04kgf/Pin min
8.Operating temperature range: -25°C ~ +85°C

GT-F0512 S R 18 -XX X XX 01

- **G-Switch**
- **Series No**
- **Termipoint** S-SMT
- **Angle** R-90°
- **Height** 18-1.80mm
- **Pin Q' PY** 04~50
- **Housing Colour** S-Nature
- **Terminal Plating** 01-G/F

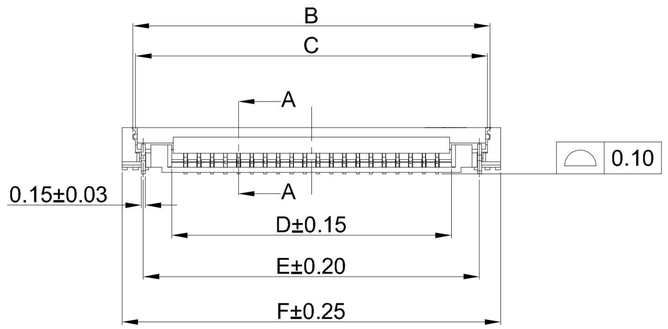

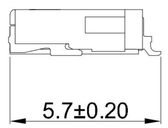

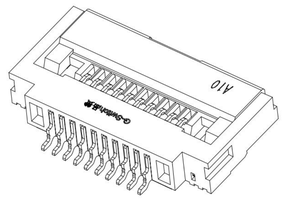

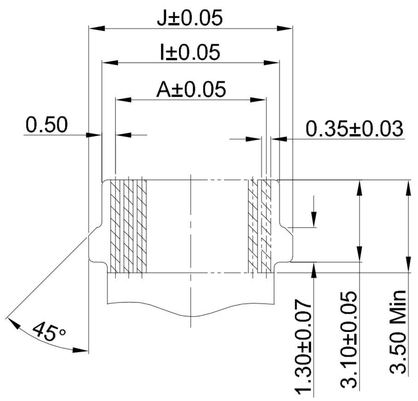

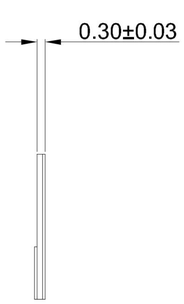

APPLICABLE FLAT CABLE

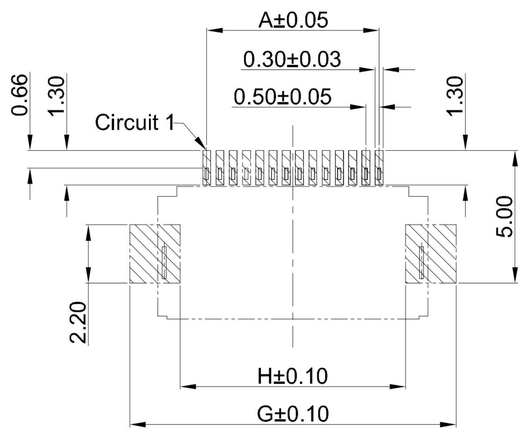

RECOMMENDED PCB LAYOUT
TOLERANCE:±0.05

Ordering Information:

Circuit	Dimensions(mm)									
	A	B	C	D	E	F	G	H	I	J
04	1.50	5.29	5.47	2.57	4.70	6.30	7.30	3.50	2.50	3.90
06	2.50	6.29	6.47	3.57	5.70	7.30	8.30	4.50	3.50	4.90
08	3.50	7.29	7.47	4.57	6.70	8.30	9.30	5.50	4.50	5.90
10	4.50	8.29	8.47	5.57	7.70	9.30	10.30	6.50	5.50	6.90
12	5.50	9.29	9.47	6.57	8.70	10.30	11.30	7.50	6.50	7.90
14	6.50	10.29	10.47	7.57	9.70	11.30	12.30	8.50	7.50	8.90
15	7.00	10.79	10.97	8.07	10.20	11.80	12.80	9.00	8.00	9.40
20	9.50	13.29	13.47	10.57	12.70	14.30	15.30	11.50	10.50	11.90
26	12.50	16.29	16.47	13.57	15.70	17.30	18.30	14.50	13.50	14.90
30	14.50	18.29	18.47	15.57	17.70	19.30	20.30	16.50	15.50	16.90
32	15.50	19.29	19.47	16.57	18.70	20.30	21.30	17.50	16.50	17.90
40	19.50	23.29	23.47	20.57	22.70	24.30	25.30	21.50	20.50	21.90
50	24.50	28.29	28.47	25.57	27.70	29.30	30.30	26.50	25.50	26.90
---	---	---	---	---	---	---	---	---	---	---

NO.	PART NAME	MATERIAL	REMARK
4	SOLDER TABS	BRASS	MATTE Tin
3	CONTACT	PHOSPHOR BRONZE	Gold-Flash On Contact Area
2	COVER	LCP,94V-0	BLACK
1	HOUSING	LCP,94V-0	NATURE

Pb Process Capable | RoHS Compliant EU RoHS Standards | HALOGEN Compliant Halogen Free

SCALE: 1:1 | UNIT: mm
SIZE: A4

Unless otherwise General Tolerance:

X	±0.40
X.x	±0.30
X.xx	±0.20
X°	±5°
X.x°	±3°

Title: FPC 0.50mm Pitch 90° SMT With Lock H1.8mm Connector

Molde Code: GT-F0512SR18-XXXXX01

DRAWN	CHECKED	APPROVED	DATE
Hu	Chen	Chen	2022.12.28

品赞科技 b-Switch www.dg-switch.com

REV: A0 | SHEET: 1/1