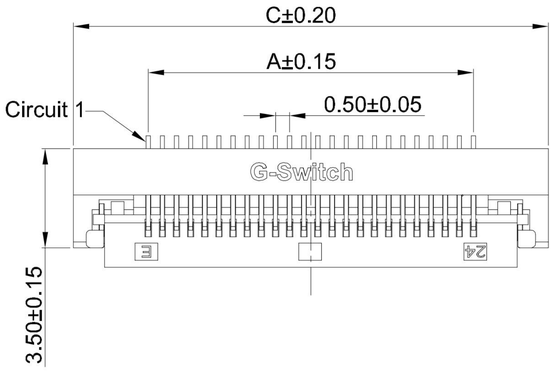

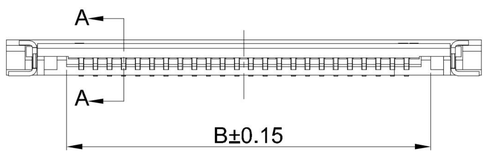

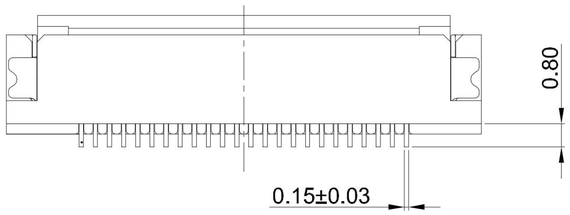

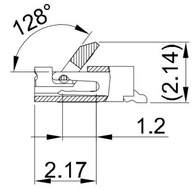

SECION:A-A

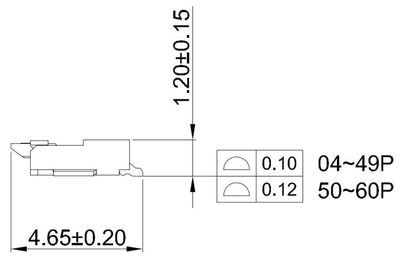

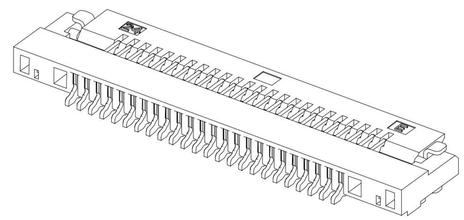

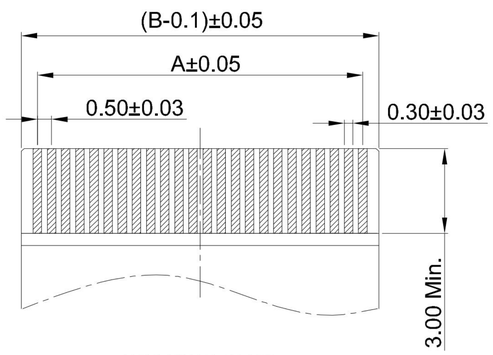

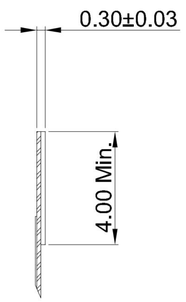

APPLICABLE FPC

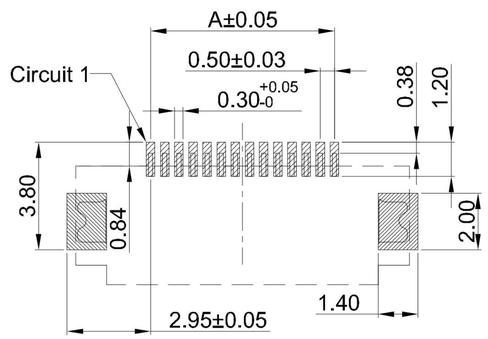

RECOMMENDED PCB LAYOUT
TOLERANCE:±0.05

G-Switch Specification:

1.Current rated: 0.5A AC/DC
2.Voltage rating: 50V AC/DC
3.Withstanding voltage: 500V AC
4.Contact resistance: 30mΩ max.
5.Insulation resistance: 500MΩ min
6.Durability cycle: 30Cycles
7.Removal force: 0.03kgf/Pin min
8.Operating temperature range: -25°C ~ +85°C

GT-F0517 S R 12 -XX X XX 01

- **G-Switch**
- **Series No**
- **Termipoint** S-SMT
- **Angle** R-90°
- **Height** 12-1.20mm
- **Pin Q' PY** 04~60
- **Housing Colour** S-Nature
- **Terminal Plating** 01-G/F

Ordering Information:

Circuit	Dimensions(mm) A	B	C	Circuit	Dimensions(mm) A	B	C	Circuit	Dimensions(mm) A	B	C
04	1.50	2.55	6.80	23	11.00	12.05	16.30	42	20.50	21.55	25.80
05	2.00	3.05	7.30	24	11.50	12.55	16.80	43	21.00	22.05	26.30
06	2.50	3.55	7.80	25	12.00	13.05	17.30	44	21.50	22.55	26.80
07	3.00	4.05	8.30	26	12.50	13.55	17.80	45	22.00	23.05	27.30
08	3.50	4.55	8.80	27	13.00	14.05	18.30	46	22.50	23.55	27.80
09	4.00	5.05	9.30	28	13.50	14.55	18.80	47	23.00	24.05	28.30
10	4.50	5.55	9.80	29	14.00	15.05	19.30	48	23.50	24.55	28.80
11	5.00	6.05	10.30	30	14.50	15.55	19.80	49	24.00	25.05	29.30
12	5.50	6.52	10.80	31	15.00	16.05	20.30	50	24.50	25.55	29.80
13	6.00	7.05	11.30	32	15.50	16.55	20.80	51	25.00	26.05	30.30
14	6.50	7.55	11.80	33	16.00	17.05	21.30	52	25.50	26.55	30.80
15	7.00	8.05	12.30	34	16.50	17.55	21.80	53	26.00	27.05	31.30
16	7.50	8.55	12.80	35	17.00	18.05	22.30	54	26.50	27.55	31.80
17	8.00	9.05	13.30	36	17.50	18.55	22.80	55	27.00	28.05	32.30
18	8.50	9.55	13.80	37	18.00	19.05	23.30	56	27.50	28.55	32.80
19	9.00	10.05	14.30	38	18.50	19.55	23.80	57	28.00	29.05	33.30
20	9.50	10.55	14.80	39	19.00	20.05	24.30	58	28.50	29.55	33.80
21	10.00	11.05	15.30	40	19.50	20.55	24.80	59	29.00	30.05	34.30
22	10.50	11.55	15.80	41	20.00	21.05	25.30	60	29.50	30.55	34.80

NO.	PART NAME	MATERIAL	REMARK
4	SOLDER TABS	PHOSPHOR BRONZE	MATTE Tin
3	CONTACT	PHOSPHOR BRONZE	Gold-Flash On Contact Area
2	COVER	LCP,94V-0	BLACK
1	HOUSING	LCP,94V-0	NATURE

Pb Process Capable | RoHS Compliant EU RoHS Standards | HALOGEN Compliant Halogen Free

SCALE: 1:1 UNIT: mm
SIZE: A4

Unless otherwise General Tolerance:

X	±0.40
X.x	±0.30
X.xx	±0.20
X°	±5°
X.x°	±3°

Title: FPC 0.50mm Pitch 90° H1.20mm SMT Type Front Flip Connector

Molde Code: GT-F0517SR12-XXXXX01

DRAWN	CHECKED	APPROVED	DATE
Jiang	Hu	Chen	2021.06.28

品赞科技 b-Switch ®
www.dg-switch.com

REV: A0 SHEET: 1/1