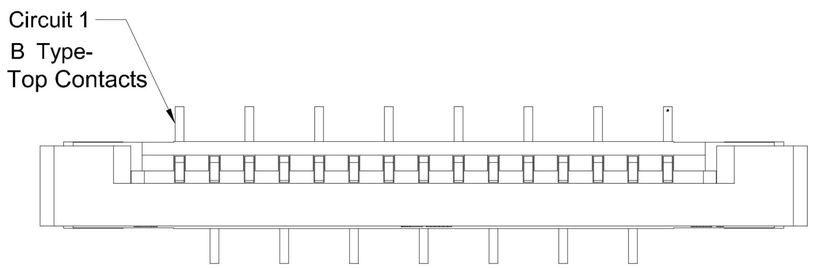

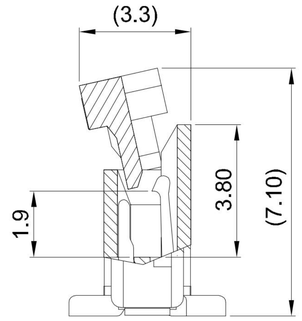

SECION:A-A

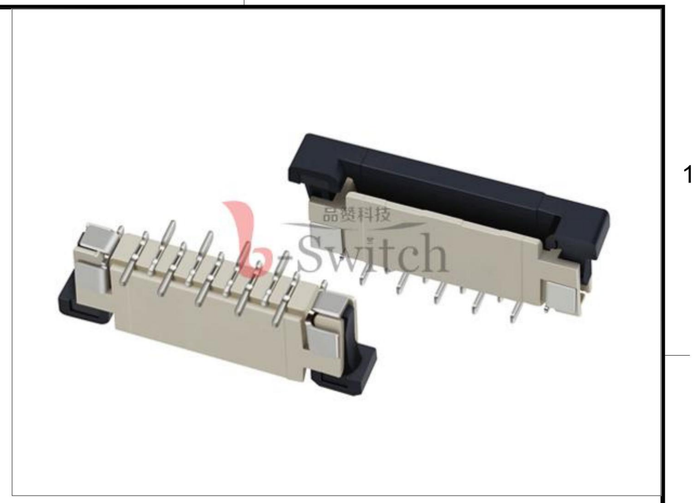

GT-F1001 S V 55 -XX X XX 02

G-Switch

Series No

Termipoint
S-SMT

Angle
V-180°

Height
55-5.50mm

Contact
01-A Type
(Bottom Contacts)
02-B Type
(Top Contacts)

Terminal Plating
11-All G/F
MT-Matte Tin
BT-Bright Tin

Housing Colour
S-Nature

Pin Q' PY
04~40

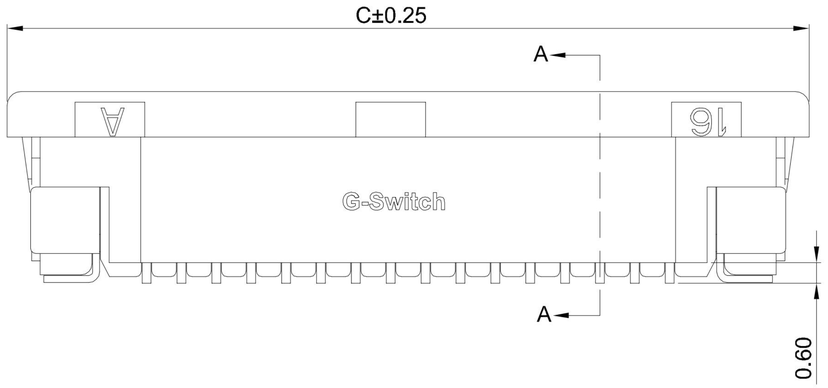

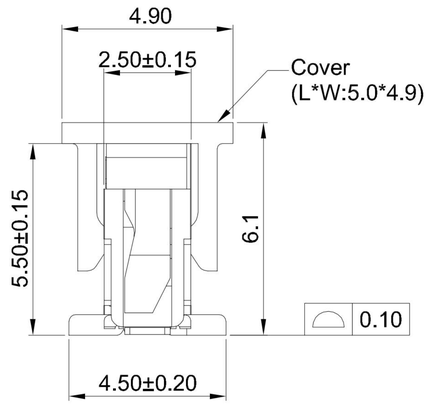

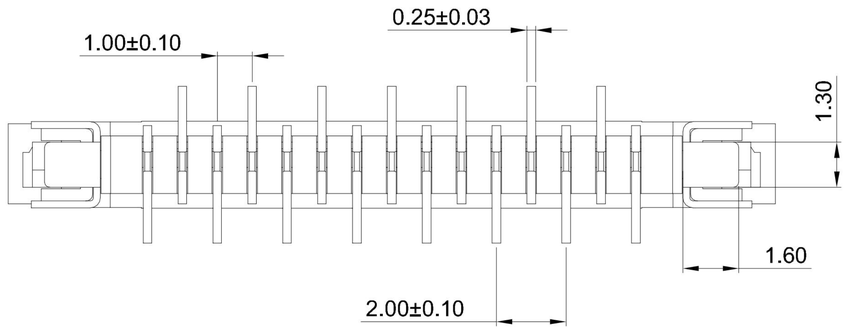

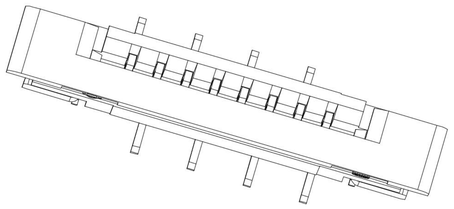

G-Switch Specification:

1.Current rated: 0.5A AC/DC
2.Voltage rating: 50V AC/DC
3.Withstanding voltage: 250V AC
4.Contact resistance: 30mΩ max.
5.Insulation resistance: 500MΩ min
6.Durability cycle: 20Cycles
7.Removal force: 0.03kgf/Pin min
8.Operating temperature range: -25°C ~ +85°C

NO.	PART NAME	MATERIAL	REMARK
4	SOLDER TABS	BRASS	BRIGHT Tin
3	CONTACT	BRASS	ALL Au G/F OR BRIGHT Tin
2	COVER	LCP,94V-0	BLACK
1	HOUSING	LCP,94V-0	NATURE

Process Capable Pb — RoHS Compliant EU RoHS Standards — Compliant Halogen Free

SCALE: 1:1 | UNIT: mm
SIZE: A4

Unless otherwise General Tolerance:

X	±0.40
X.x	±0.30
X.xx	±0.20
X°	±5°
X.x°	±3°

Title: FPC 1.00mm Pitch 180° H5.50mm SMT Type Top Contacts Connector

Molde Code: GT-F1001SV55-XXXXX02

DRAWN	CHECKED	APPROVED	DATE
Jiang	Hu	Chen	2022.11.18

品赞科技 b-Switch ®
www.dg-switch.com

REV: A0 | SHEET: 1/2

Ordering Information:

Circuit	Dimensions(mm)		
	A	B	C
4P	3.00	5.03	11.10
5P	4.00	6.03	12.10
6P	5.00	7.03	13.10
7P	6.00	8.03	14.10
8P	7.00	9.03	15.10
9P	8.00	10.03	16.10
10P	9.00	11.03	17.10
11P	10.00	12.03	18.10
12P	11.00	13.03	19.10
13P	12.00	14.03	20.10
14P	13.00	15.03	21.10
15P	14.00	16.03	22.10
16P	15.00	17.03	23.10
17P	16.00	18.03	24.10
18P	17.00	19.03	25.10
19P	18.00	20.03	26.10
20P	19.00	21.03	27.10
21P	20.00	22.03	28.10
22P	21.00	23.03	29.10
23P	22.00	24.03	30.10
24P	23.00	25.03	31.10
25P	24.00	26.03	32.10
26P	25.00	27.03	33.10
27P	26.00	28.03	34.10
28P	27.00	29.03	35.10
29P	28.00	30.03	36.10
30P	29.00	31.03	37.10
31P	30.00	32.03	38.10
32P	31.00	33.03	39.10
33P	32.00	34.03	40.10
34P	33.00	35.03	41.10
35P	34.00	36.03	42.10
36P	35.00	37.03	43.10
37P	36.00	38.03	44.10
38P	37.00	39.03	45.10
39P	38.00	40.03	46.10
40P	39.00	41.03	47.10

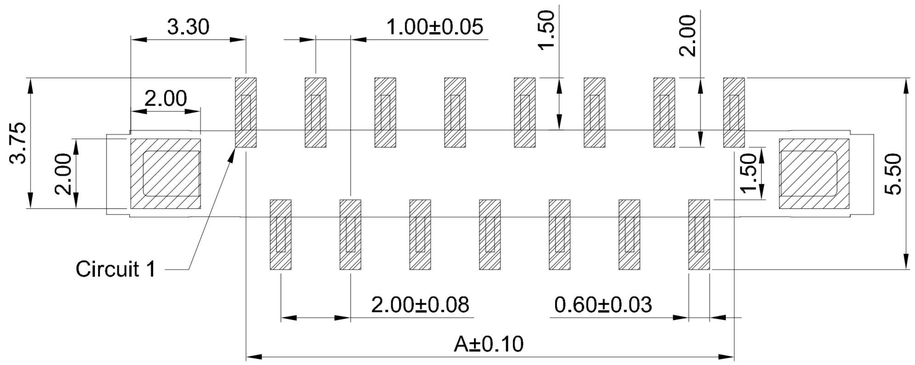

RECOMMENDED PCB LAYOUT
TOLERANCE:±0.05

B Type-
Top Contacts

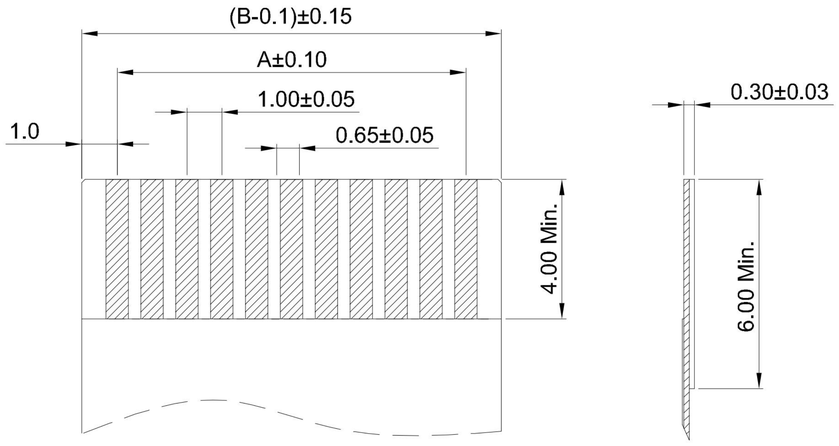

APPLICABLE FPC

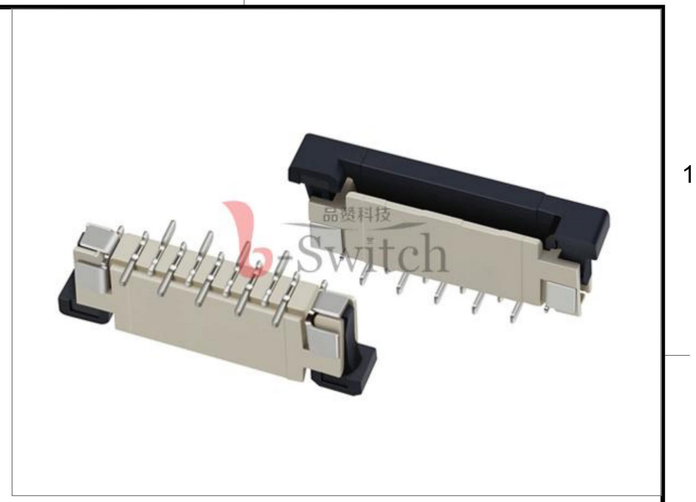

GT-F1001 S V 55 -XX X XX 02

G-Switch

Series No

Termipoint
S-SMT

Angle
V-180°

Height
55-5.50mm

Contact
01-A Type
(Bottom Contacts)
02-B Type
(Top Contacts)

Terminal Plating
11-All G/F
MT-Matte Tin
BT-Bright Tin

Housing Colour
S-Nature

Pin Q' PY
04~40

G-Switch Specification:

1.Current rated: 0.5A AC/DC
2.Voltage rating: 50V AC/DC
3.Withstanding voltage: 250V AC
4.Contact resistance: 30mΩ max.
5.Insulation resistance: 500MΩ min
6.Durability cycle: 20Cycles
7.Removal force: 0.03kgf/Pin min
8.Operating temperature range: -25°C ~ +85°C

NO.	PART NAME	MATERIAL	REMARK
4	SOLDER TABS	BRASS	BRIGHT Tin
3	CONTACT	BRASS	ALL Au G/F OR BRIGHT Tin
2	COVER	LCP,94V-0	BLACK
1	HOUSING	LCP,94V-0	NATURE

Pb Process Capable | RoHS Compliant EU RoHS Standards | HALOGEN Compliant Halogen Free

SCALE: 1:1	UNIT: mm	Title: FPC 1.00mm Pitch 180° H5.50mm SMT Type Top Contacts Connector	品赞科技 G-Switch www.dg-switch.com
SIZE: A4			
Unless otherwise General Tolerance: X ±0.40, X.x ±0.30, X.xx ±0.20, X° ±5°, X.x° ±3°		Molde Code: GT-F1001SV55-XXXXX02	

DRAWN	CHECKED	APPROVED	DATE	REV: A0	SHEET: 2/2
Jiang	Hu	Chen	2022.11.18		