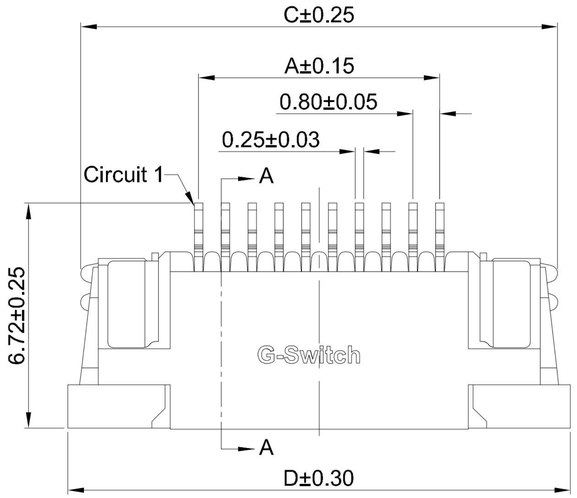

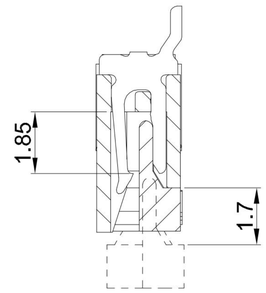

SECTION A-A

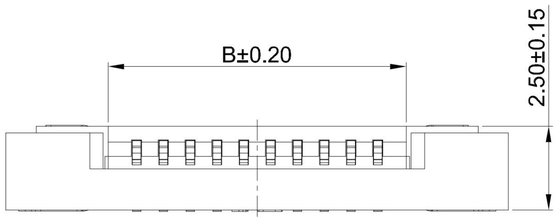

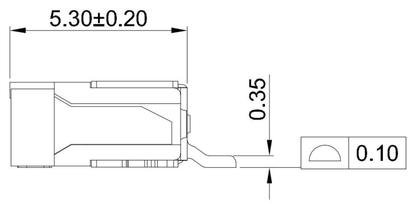

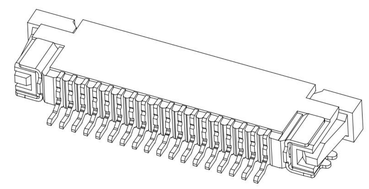

G-Switch Specification:

1.Current rated: 0.4A AC/DC
2.Voltage rating: 50V AC/DC
3.Withstanding voltage: 200V AC for 1 min
4.Contact resistance: 20mΩ max.
5.Insulation resistance: 500MΩ min
6.Durability cycle: 20Cycles
7.Removal force: 0.05kgf/Pin min
8.Operating temperature range: -25°C ~ +85°C

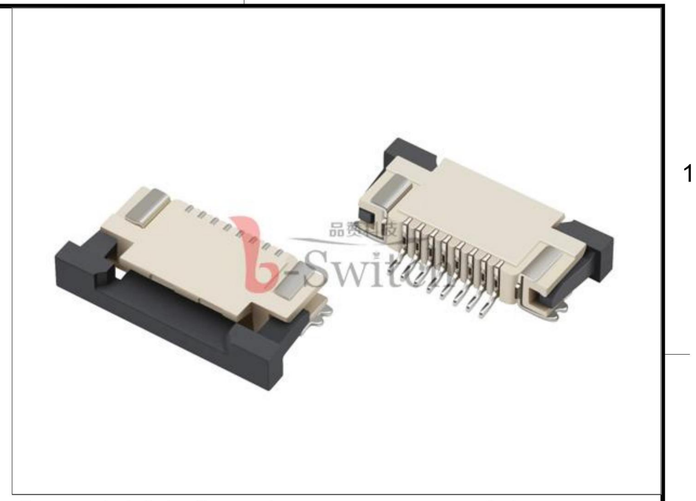

GT-F0802 S R 25 -XX X XX 01

- **G-Switch**
- **Series No**
- **Termipoint** S-SMT
- **Angle** R-90°
- **Height** 25-2.50mm
- **Pin Q' PY** 04~35
- **Housing Colour** S-Nature
- **Terminal Plating** BT-Bright Tin

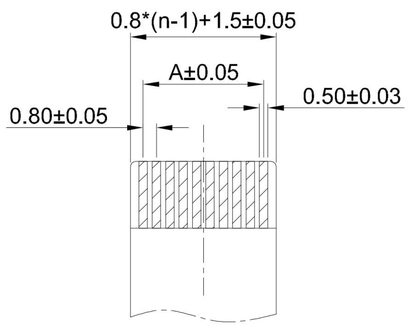

APPLICABLE FPC

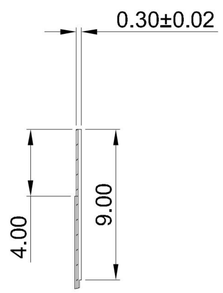

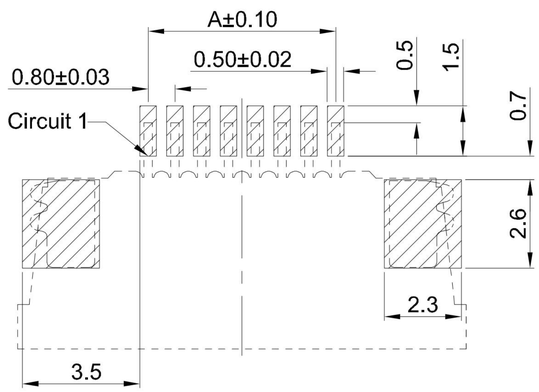

RECOMMENDED PCB LAYOUT
TOLERANCE:±0.05

Ordering Information:

Circuit	Dimensions(mm)				Circuit	Dimensions(mm)			
	A	B	C	D		A	B	C	D
04	2.40	4.00	9.60	10.30	20	15.20	16.80	22.40	23.10
05	3.20	4.80	10.40	11.10	21	16.00	17.60	23.20	23.90
06	4.00	5.60	11.20	11.90	22	16.80	18.40	24.00	24.70
07	4.80	6.40	12.00	12.70	23	17.60	19.20	24.80	25.50
08	5.60	7.20	12.80	13.50	24	18.40	20.00	25.60	26.30
09	6.40	8.00	13.60	14.30	25	19.20	20.80	26.40	27.10
10	7.20	8.80	14.40	15.10	26	20.00	21.60	27.20	27.90
11	8.00	9.60	15.20	15.90	27	20.80	22.40	28.00	28.70
12	8.80	10.40	16.00	16.70	28	21.60	23.20	28.80	29.50
13	9.60	11.20	16.80	17.50	29	22.40	24.00	29.60	30.30
14	10.40	12.00	17.60	18.30	30	23.20	24.80	30.40	31.10
15	11.20	12.80	18.40	19.10	31	24.00	25.60	31.20	31.90
16	12.00	13.60	19.20	19.90	32	24.80	26.40	32.00	32.70
17	12.80	14.40	20.00	20.70	33	25.60	27.20	32.80	33.50
18	13.60	15.20	20.80	21.50	34	26.40	28.00	33.60	34.30
19	14.40	16.00	21.60	22.30	35	27.20	28.80	34.40	35.10

NO.	PART NAME	MATERIAL	REMARK
4	SOLDER TABS	BRASS	BRIGHT Tin
3	CONTACT	PHOSPHOR BRONZE	BRIGHT Tin
2	COVER	LCP,94V-0	BLACK
1	HOUSING	LCP,94V-0	NATURE

Pb Process Capable | RoHS Compliant EU RoHS Standards | HALOGEN Compliant Halogen Free

SCALE: 1:1 | UNIT: mm | SIZE: A4

Unless otherwise General Tolerance:

X	±0.40
X.x	±0.30
X.xx	±0.20
X°	±5°
X.x°	±3°

Title: FPC 0.80mm Pitch 90° H2.5mm SMT Type Upper Contact Drawer

Molde Code: GT-F0802SR25-XXXXX01

DRAWN	CHECKED	APPROVED	DATE
Hu	Xia	Chen	2022.04.18

品赞科技 G-Switch ® www.dg-switch.com

REV: A0 | SHEET: 1/1