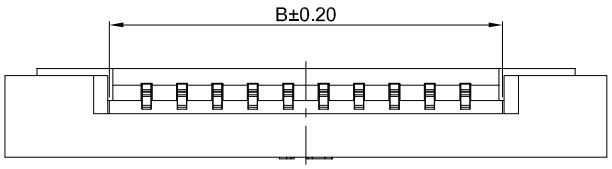

G-Switch Specification:

1.Current rated: 0.5A AC/DC
2.Voltage rating: 50V AC/DC
3.Withstanding voltage: 200V AC
4.Contact resistance: 20mΩ max.
5.Insulation resistance: 500MΩ min
6.Durability cycle: 20Cycles
7.Removal force: 0.05kgf/Pin min
8.Operating temperature range: -25°C ~ +85°C

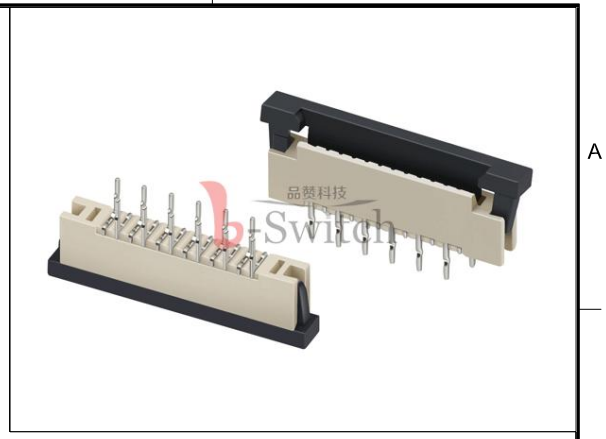

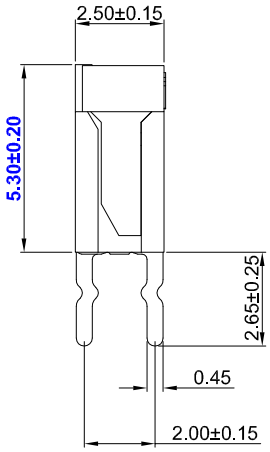

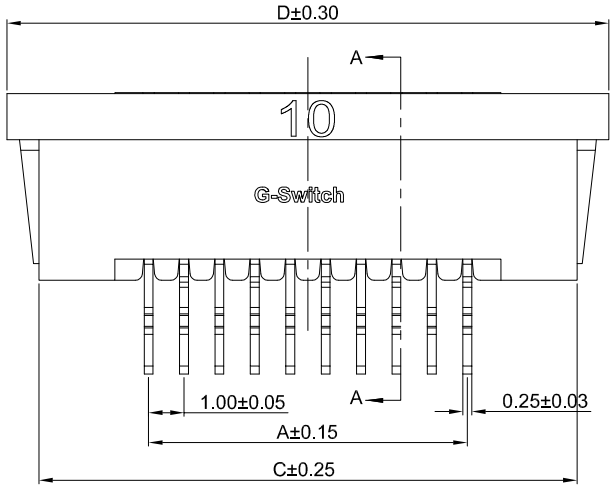

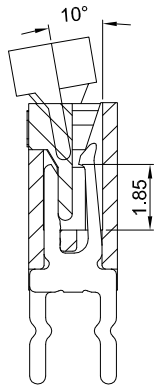

SECTION A-A

GT-F1001 D V 53 -XX X XX 01

G-Switch

Series No

Termipoint
D-DIP

Angle
V-180°

Terminal Plating
BT-Bright Tin

Housing Colour
S-Nature

Pin Q' PY
06~30

Height
53-5.30mm

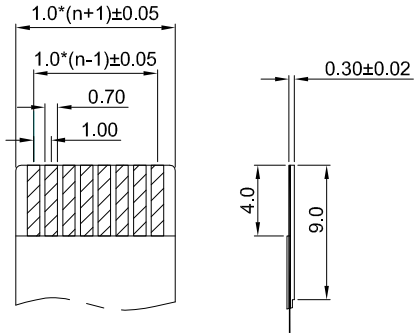

PROPER CABLE (SCALE 2:1)

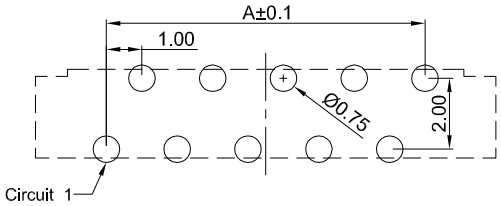

PCB REFERENCE DIAGRAM
TOLERANCE:±0.05

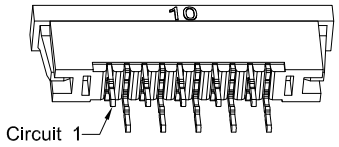

Ordering Information:

Circuit	Dimensions(mm)			
	A	B	C	D
06	5.00	7.15	11.20	13.10
08	7.00	9.15	13.20	15.10
10	9.00	11.15	15.20	17.10
12	11.00	13.15	17.20	19.10
14	13.00	15.15	19.20	21.10
15	14.00	16.15	20.20	22.10
16	15.00	17.15	21.20	23.10
18	17.00	19.15	23.20	25.10
20	19.00	21.15	25.20	27.10
22	21.00	23.15	27.20	29.10
24	23.00	25.15	29.20	31.10
25	24.00	26.15	30.20	32.10
26	25.00	27.15	31.20	33.10
28	27.00	29.15	33.20	35.10
29	28.00	30.15	34.20	36.10
30	29.00	31.15	35.20	37.10

NO.	PART NAME	MATERIAL	REMARK
3	CONTACT	PHOSPHOR BRONZE	BRIGHT Tin
2	COVER	LCP,94V-0	BLACK
1	HOUSING	LCP,94V-0	NATURE

Pb Process Capable | RoHS Compliant EU RoHS Standards | Compliant Halogen Free

SCALE: 1:1 | UNIT: mm
SIZE: A4

Unless otherwise General Tolerance:

X	±0.40
X.x	±0.30
X.xx	±0.20
X°	±5°
X.x°	±3°

Title: FPC 1.00mm Pitch 180° DIP Double Row Single Sided Welding Bottom Contacts

Molde Code: GT-F1001DV53-XXXXX01

DRAWN	CHECKED	APPROVED	DATE
Jiang	Hu	Chen	2021.06.28

品赞科技 b-Switch ®
www.dg-switch.com

REV: A0 | SHEET: 1/1