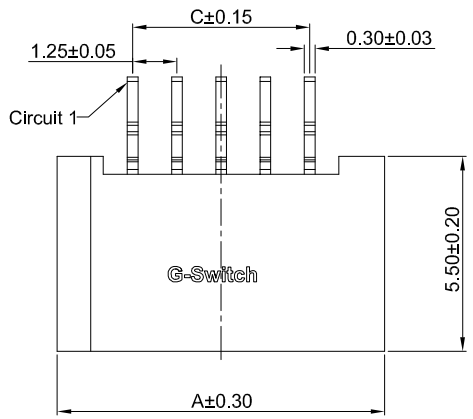

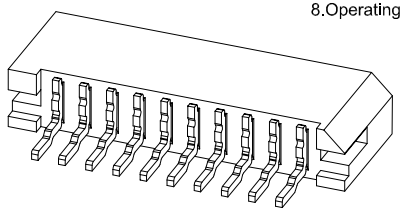

G-Switch Specification:

1.Current rated: 1.0A AC/DC
2.Voltage rating: 125V AC/DC
3.Withstanding voltage: 500V AC
4.Contact resistance: 50mΩ max.
5.Insulation resistance: 100MΩ min
6.Durability cycle: 20Cycles
7.Removal force: 0.05kgf/Pin min
8.Operating temperature range: -25°C ~ +85°C

GT-F1251 S R 28 -XX X XX 01

- **G-Switch**
- **Series No**
- **Termipoint** S-SMT
- **Angle** R-90°
- **Terminal Plating** BT-Bright Tin
- **Housing Colour** B-Black
- **Pin Q' PY** 04~20
- **Height** 28-2.80mm

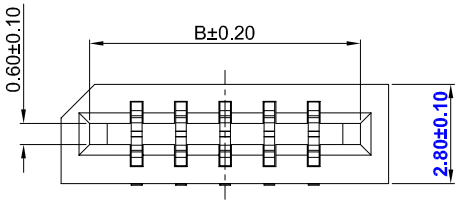

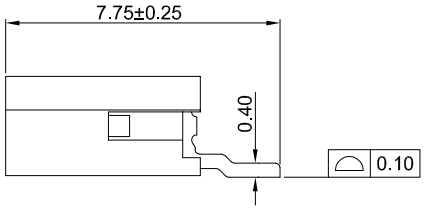

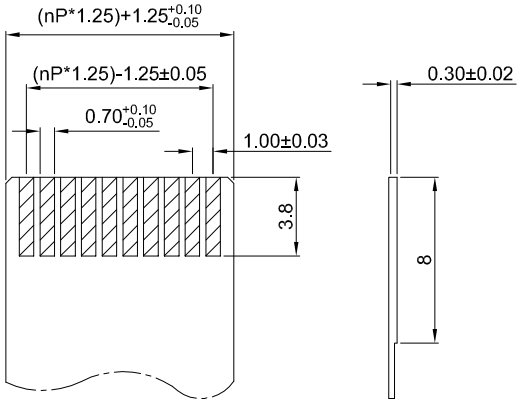

PROPER CABLE

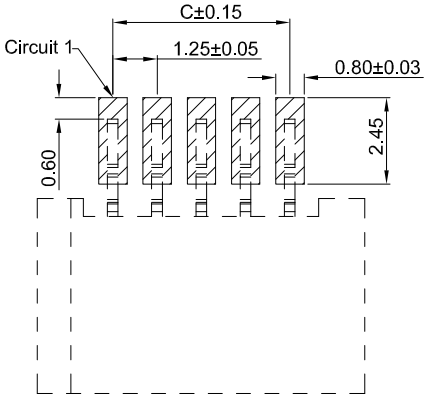

PCB REFERENCE DIAGRAM
TOLERANCE:±0.05

Ordering Information:

Circuit	Dimensions(mm)			Circuit	Dimensions(mm)		
	A	B	C		A	B	C
04	8.00	6.40	3.75	18	25.50	23.90	21.25
05	9.25	7.65	5.00	19	26.75	25.15	22.50
06	10.50	8.90	6.25	20	28.00	26.40	23.75
07	11.75	10.15	7.50	21	29.25	27.65	25.00
08	13.00	11.40	8.75	22	30.50	28.90	26.25
09	14.25	12.65	10.00	23	31.75	30.15	27.50
10	15.50	13.90	11.25	24	33.00	31.40	28.75
11	16.75	15.15	12.50	25	34.25	32.65	30.00
12	18.00	16.40	13.75	26	35.50	33.90	31.25
13	19.25	17.65	15.00	27	36.75	35.15	32.50
14	20.50	18.90	16.25	28	38.00	36.40	33.75
15	21.75	20.15	17.50	29	39.25	37.65	35.00
16	23.00	21.40	18.75	30	40.50	38.90	36.25
17	24.25	22.65	20.00	--	--	--	--

NO.	PART NAME	MATERIAL	REMARK
2	CONTACT	PHOSPHOR BRONZE	BRIGHT Tin
1	HOUSING	PA6T,94V-0	BLACK

Pb Process Capable | RoHS Compliant EU RoHS Standards | Compliant Halogen Free

SCALE: 1:1	UNIT: mm	Title: FPC Pitch 1.25mm 90° Right SMT Single Row Double Sided Welding	
SIZE: A4			
Unless otherwise General Tolerance:		Molde Code: GT-F1251SR28-XXXXX01	
X ±0.40			
X.x ±0.30			
X.xx ±0.20			
X° ±5°			
X.x° ±3°			

DRAWN	CHECKED	APPROVED	DATE
Jiang	Hu	Chen	2022.11.18

品赞科技 b-Switch www.dg-switch.com ®

REV: A0 SHEET: 1/1